Long-haul Transmission Performance Evaluation of Ultra-long Raman Fibre Laser Based Amplification Influenced by Second Order Co-pumping

M. Tan, P. Rosa, I. D. Phillips, and P. Harper
Aston Institute of Photonic Technologies, Aston University, Birmingham B4 7ET, UK
tanm@aston.ac.uk

Abstract: A transmission performance investigation using ultra-long Raman fibre laser based amplification with different co-pump power is presented. We attribute Q^2 factor degradation to RIN of co-pump and induced fibre laser as well as increased SBS.
OCIS codes: 060.1660, 060. 2320.

1. Introduction

In a recent paper we showed that second order ultra-long Raman fibre laser (URFL) based amplification can be used to give a symmetric signal power profile which allows effective all-optical nonlinearity compensation to be achieved using mid-span optical phase conjugation [1]. In that experiment we found that the best transmission performance was achieved using 2nd order counter pumping only instead of bidirectional pumping. However, using 2nd order bi-directional pumping can reduce the intra-span signal power variation to an almost negligible ~+/- 0.8 dB for an 80 km transmission span leading to lower noise figure and higher OSNR. This in principle increases the amount of nonlinearity compensation using optical phase conjugation and gives close to the ideal distributed amplification to minimise noise. However, in conventional first or dual order distributed Raman amplification, bidirectional pumping increases the penalty due to relative intensity noise (RIN) transfer from co-propagated pumping [2,3].

In this paper, long-haul 100G DP-QPSK WDM transmission using URFL based amplification is studied. We present an evaluation of transmission performance with different co-propagated 2nd order pump power. Signal power variation (SPV), the transmission performance at a reach of up to 7520 km, RIN characteristics of the fibre laser and the output signal, and the intra-cavity spectra of the fibre laser are also characterised and presented. To our best knowledge, this is the first experimental evaluation of transmission performance penalty of URFL based scheme in repeatered coherent systems. We attribute the introduced Q^2 factor penalty to a combination of effects including relatively high RIN of the 2nd order pump and induced fibre laser as well as increased stimulated Brillouin scattering (SBS) of the fibre laser.

2. Experimental work

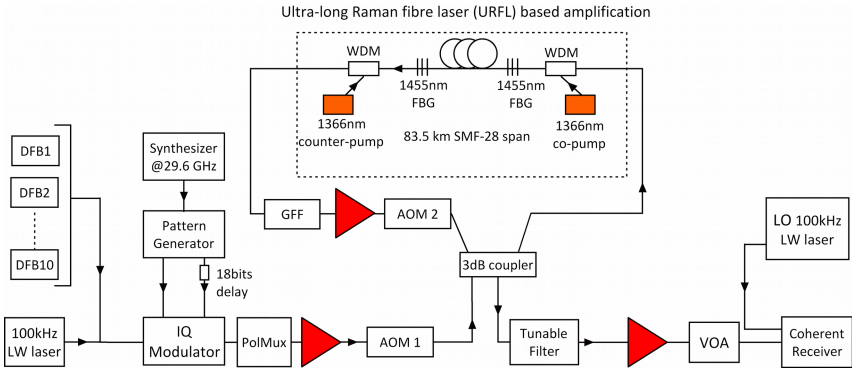

Fig. 1. Experimental setup of transmitter, recirculating loop, and coherent receiver

In the URFL based amplification scheme, a matched pair of ~95% reflectivity fibre Bragg gratings (FBGs) with a centre peak at 1455 nm and a 3dB bandwidth of ~0.5 nm were located at both ends of an 83.5 km fibre span. Highly depolarised 2nd order pumps at 1366 nm with RIN of approximately -120 dB/Hz were used to create an ultra-long fibre laser (83 km cavity) at the wavelength specified by the FBGs. The resultant bi-directionally oscillating fibre laser together with external pumps amplified the signal in the C band.

To evaluate how the penalty introduced from co-pump power increases and the improvement from more evenly distributed gain impact transmission performance, a recirculating loop experiment was conducted using the set-up shown in Fig. 1. The test signals consisted of ten DFB lasers with 100 GHz spacing ranging from 1542.14 nm to

1549.32 nm. A 100 kHz linewidth tunable laser was used as the "channel under test". The multiplexed signals were QPSK modulated with normal and inverse 2^{31}-1 PRBS patterns at 29.6 Gbit/s with a relative delay of 18 bits between I & Q. A polarisation multiplexer with a 296 bits delay between the two polarisations states gave the resultant 10×118.4 Gb/s DP-QPSK signals. An EDFA was used before launching into the recirculating loop. The transmission span in the recirculating loop was 83.5 km of SMF-28 which a total loss was ~18 dB including 16.7 dB from the SMF-28 fibre, 1.1 dB from 1366/1550 WDMs, and 0.2 dB from FBGs. The loop AOM switch, 3 dB coupler, gain flattening filter (GFF), and Raman components gave a total round trip loss of ~12 dB, which was compensated by a single stage EDFA at the end of the loop. The receiver was a standard polarisation diverse coherent detection set up using an 80 GSa/s, 36 GHz bandwidth real time oscilloscope for analogue to digital conversion. Offline DSP was used with standard algorithms for signal recovery and linear transmission impairments compensation. Q^2 factors were estimated from the constellation distribution, and averaged over 590k symbols.

Co-pump power (dBm)	0.0	25.5	26.0	26.5	27.0	27.5	28.0
Counter-pump power (dBm)	30.3	29.7	29.6	29.4	29.2	29.0	28.6
Co-pump /total pump power (%)	0	27.6	30.4	33.9	37.6	41.4	46.4

Table. 1. Second order Co-and counter-propagated pump power used in the experiments

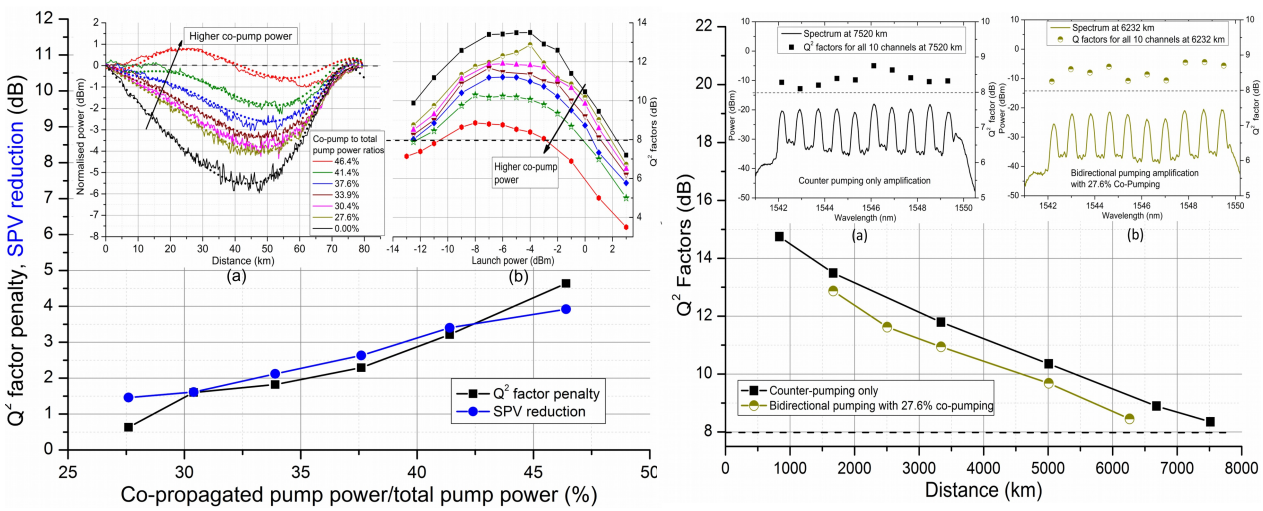

Fig. 2. (Left) Co-pumping power ratio versus Q^2 factor penalty and SPV reduction: inset(a). Simulations (dot line) and experimental data (solid line) of SPVs with different co-pump power; inset(b): Launch power sweep versus Q^2 factor of 1545.32nm channel at 1670km. (Right) Transmission distance versus Q^2 factor using counter-pumping only and bidirectional pumping with 27.6% co-pumping: inset(a). Q^2 factors for all ten channels and spectra measured at 7520 km with counter-pump only; inset(b): Q^2 factors for all ten channels and spectra measured at 6232 km with lowest co-pump power.

SPVs at 1545.32 nm along the fibre (simulations and experimental data) were compared using a modified optical time-domain reflectometer set up with different co- and counter-propagated powers and are shown in inset (a) of Fig.2 (left). The pump powers listed in Table 1 were used to compensate for the 16.7 dB loss from the fibre. The lowest peak-to-peak signal power excursion of ~1.6 dB was achieved with almost symmetrical bidirectional pumping (46.4% co-pumping). With counter-propagated pumping only, the variation reached ~5.5 dB. It shows that the use of 2nd order co-pumping gave a significant reduction in SPV. This can reduce the amplifier noise figure – the noise figure would correspond to the integration of the SPV, as bidirectional pumping and fibre lasing can "push" the gain further from ends of span from both directions and distribute the gain more uniformly. The launch power sweep for each co-pumping scheme using the 1545.32 nm channel was compared at 1670 km (20 recirculations) in inset (b) of Fig.2 (left). The optimum launch power was decreased from -4 dBm to -8 dBm, as co-pumping power was increased indicating that the nonlinear threshold changes as the integral of SPV traces due to the increase of effective nonlinear length. The Q^2 factor penalty was increased from 0.6 dB to 4.6 dB with higher co-pumping power regardless of the reduction of amplifier noise figure due to flatter signal power variations as shown in Fig. 2

(left). However, Fig. 2 (right) shows Q^2 factors versus transmission distances of the 1545.32 nm channel using 0% and 27.6% co-pumping. Inset (a) and (b) in Fig. 2 (right) show the spectra and Q^2 factors for all ten channels at maximum transmission distances. These show that counter-pumping only gave a maximum reach of 7520 km in terms of 8 dB Q^2 factor threshold. This was reduced to 6263 km for co-pump power ratio of 27.6%.

RIN characteristics of the ultra-long Raman fibre laser and the output signal were measured for different co-pumping schemes. We measured the RIN of the output signal after one span with an input signal of -3 dBm at 1545.32 nm from a CW ultra-low RIN (-150 dB/Hz) tunable laser. The setup for RIN measurement was based on an ultra-low-noise photo-receiver and an electronic spectrum analyser (ESA). The reason why we focus on the low frequency range is because high frequency components of RIN from the pump are averaged along the fibre and there is little effect in co-pumping scheme because of the "walk off" between propagating velocities of signal and pump [4]. The results in Fig. 3 (left) show that there was an increase of ~15 dB in output signal RIN as co-pump power ratio was increased from 0% to 46.4%. However, the RIN of the induced fibre laser was increased less than 4 dB below 40MHz and stayed almost constant around -120 dB/Hz at higher frequency, when larger co-pumping power was applied. On the other hand, Fig.3 (right) shows the measured intra-cavity spectra of the ultra-long fibre laser for various co-pumping power. The 3 dB bandwidth was reduced with higher co-pump power, from 0.5 nm with counter-pump only to 0.3 nm with the highest co-pump power. As a consequence, the linewidth of the fibre laser was decreased leading to higher SBS which is also a cause of transmission performance degradation. Further work on the suppression of RIN and SBS will be presented at the conference.

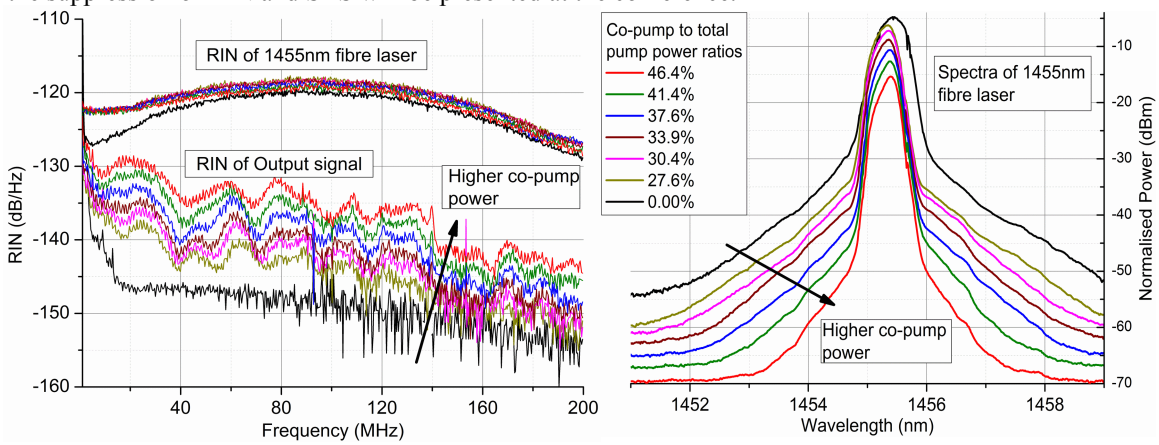

Fig. 3. (Left) Measured RIN of the ultra-long Raman fibre laser at 1455 nm and the output signal after 83km span. (Right) Measured spectra of intra-cavity fibre laser at 1455 nm

3. Conclusion

We present a detailed investigation of the impact on the long-haul 100G DP-QPSK coherent transmission system from 2nd order co-propagated pumping of URFL based scheme. Our results show that whilst using co-pumping improves the gain distribution, minimising the intra-cavity SPV and hence amplification noise, the Q^2 factor penalty with co-pumping is too great for any advantage to be seen. Indeed, the best transmission performance was achieved with counter-only pumping. In conclusion, the RIN of the external 2nd order pump and induced ultra-long fibre laser at 1455 nm has to be reduced, and the linewdith of fibre laser needs to be increased to suppress SBS, if the potential benefit of near perfect distributed gain of this URFL based technique is to be realised.

4. Acknowledgement

This work was funded by UK EPSRC Programme Grant UNLOC EP/J017582/1. The Authors thank Changle Wang, Zhongyuan Sun, and Lin Zhang for providing FBGs.

5. References

[1] I. D. Phillips et al., "Excceding the nonlinear Shannon limit using Raman fibre based amplification and optical phase conjugation," in *Optical Fiber Communication Conference*(Optical Society of America, San Francisco, California, 2014), p. M3C.1.
[2] C. R. S. Fludger et al., "Pump to signal RIN transfer in Raman fiber amplifiers," J. Lightwave Technol. **19**, 1140-1148 (2001).
[3] J. Bromage et al., "WDM transmission over multiple long spans with bidirectional Raman pumping," J. Lightwave Technol. **22**, 225-232 (2004).
[4] Y. Ohki et al., "Pump laser module for co-propagating Raman amplifier," Furukawa Review, **24**, 6-12 (2003).